Timingset VAG volkswagen 1.8 2.0 TSI TFSI EA888



Productcode: TM4075
Beschikbaarheid: 2

Prijs: 149,00 €

Omschrijving
Geschikt voor 1.8 R4 16 V tsi / tfsi, 2.0 R4 16 V tsi / tfsi ? EA888 ?

De gereedschappen in deze set zijn te gebruiken als OEM:

1 x meetklokadapter zoals OEM T10170A
1 x Cam Phaser-regelklep verwijderingshulpmiddel Hetzelfde als OEM T10352
1 x cam phaser regelklep verwijderingshulpmiddel zoals OEM T10352/1
1 x cam phaser regelklep verwijderingshulpmiddel zoals OEM T10352/2
1 x drukstuk / bescherming voor oliekeerring zoals OEM T10368
1 x kettingspanner borgpen zoals OEM T40011
4 x pinnen voor nokkenas zoals OEM T40196
2 x kettingspanner bevestigingsgereedschap zoals OEM T40267
1 x nokkenas bevestigingsgereedschap zoals OEM T40271 (T40271/1 + T40271/2)
1 x tegenhouder krukas zoals T10355
1 x meetklok zoals OEM 6079

De set is onder andere geschikt voor volgende voertuigen :

VW Golf mk5 GTi

VW Golf mk6 GTi
VW Jetta mk5, VW Jetta mk6, VW Passat b6, VW CC, VW Scirocco, VW Golf mk6 GTi VW Scirocco, VW Passat b6,
VW ccaudi A3 (8P) Audi A3 cabriolet, Audi TT, for Audi A4 (B8), Audi Q5, Audi A5 Audi Q5, Audi TT Mk2 (8j), Audi Q3
Skoda superb Mk2 (3t), Skoda Octavia
Seat, freetrack, Seat Leon Fr, Seat exeo
Seat Leon Mk2 (1P), Seat, XL

Met motorcodes :

AXX

BPY, BWA, BWA1, BYT, BZB

CABA , CABB , CABD , CADA , CAEA , CAEB , CAWA , CAWB CBFA CCTA , CCZA , CCZB , CCZC , CCZD CDAA , CDHA , CDHB , CDAB , CDNB , CDNC , CDND CESA CETA CFKA, CFPA CGYA CHHA, CHHB, CHHC, CHJA, CJBA CJEB , CJSA , CJSB , SJSC CJXA, CJXB, CJXC, CJXD, CJXF, CJXG CNCB, CNCD, CNCE, CNTA, CNTC CPLA, CPMA, CPPA, CPSA CULA, CULB, CULC CVJA, CVKB, CVLA, CXCA, CXCB, CXDA, CXDB, CYMC, CYNB, CYPA, CYPB, CYRA, CYRB, CYRC, CZPB, CZPC

DAJA, DAJB, DAXB, DAXC, DAYB, DBPA, DDWA, DEMA, DHBA, DHDA, DHGA, DJHA, DJHB, DJHC, DKTB, DKNA, DKYA, DKZA, DKZB, DKZC, DLBA, DLHB, DLRB, DLVA, DLVB, DNFE, DNJA, DNNA, DNUA, DNUB, DNUC, DNUE, DRFA

Hou er rekening mee dat verschillende nokkenasadapters nodig kunnen zijn voor verschillende motorgeneraties :

Voor Generatie I & II: te gebruiken. zoals T10352 & T10352/1
Voor generatie III: te gebruiken. zoals T10352/2
Voor generatie IV: te gebruiken. zoals T10352/3 & T10352/4

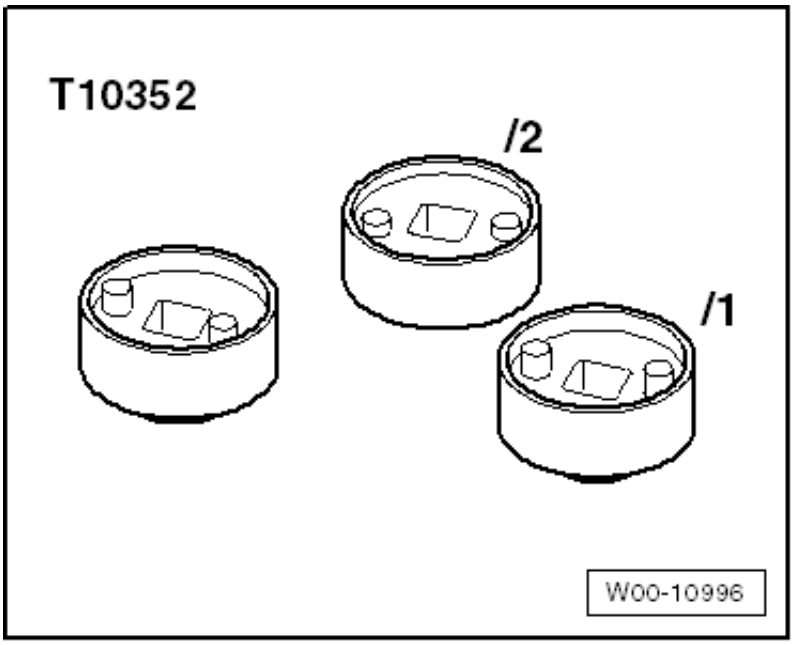

Eventuele bijkomende hulpmiddelen zijn :

T10355 : Krukas blokkeer sleutel

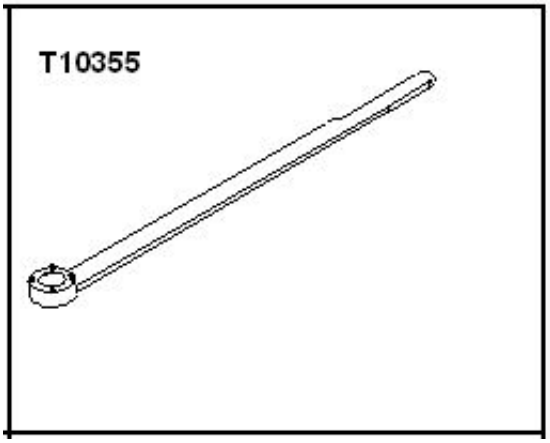

T40243 : spanningshendel voor TFSI motoren

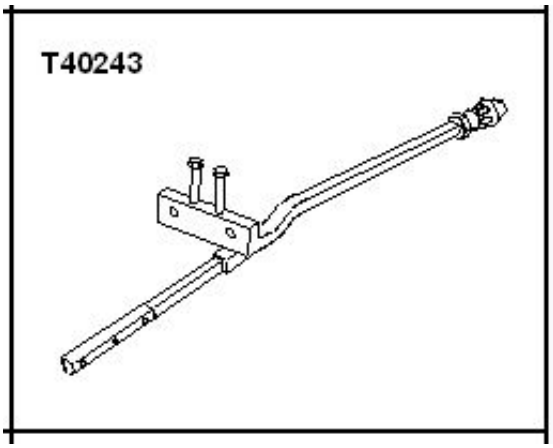

T40266 : VAG nokkenas adapter dop

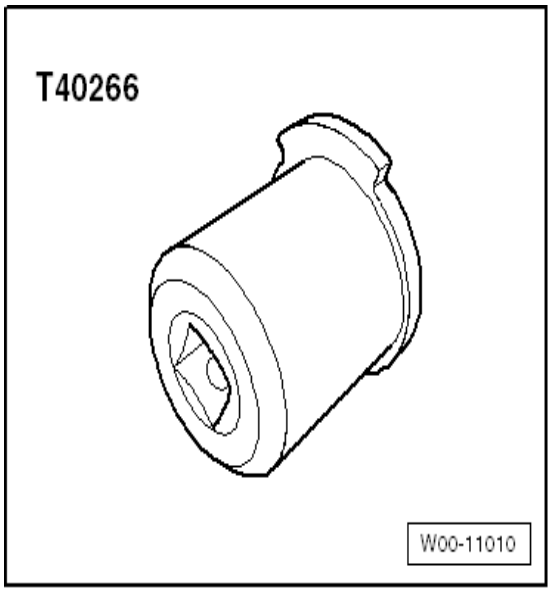

Deze set is geschikt voor volgende voertuigen
AUDI A3 (8P1) (05.2003 - 08.2012) 1.8 TFSI (160 PK, 118 kW)
AUDI A3 (8P1) (05.2003 - 08.2012) 1.8 TFSI quattro (160 PK, 118 kW)
AUDI A3 (8P1) (05.2003 - 08.2012) 2.0 TFSI (200 PK, 147 kW)
AUDI A3 (8P1) (05.2003 - 08.2012) 2.0 TFSI quattro (200 PK, 147 kW)
AUDI A3 (8V1, 8VK) (09.2012 - 08.2016) 1.8 TFSI (180 PK, 132 kW)
AUDI A3 (8V1, 8VK) (09.2012 - 08.2016) 1.8 TFSI quattro (180 PK, 132 kW)
AUDI A3 (8V1, 8VK) (09.2012 - 08.2016) S3 quattro (280 PK, 206 kW)
AUDI A3 (8V1, 8VK) (09.2012 - 08.2016) S3 quattro (286 PK, 210 kW)
AUDI A3 (8V1, 8VK) (09.2012 - 08.2016) S3 quattro (290 PK, 213 kW)
AUDI A3 (8V1, 8VK) (09.2012 - 08.2016) S3 quattro (300 PK, 221 kW)
AUDI A3 (8V1, 8VK) (09.2012 - 08.2016) S3 quattro (310 PK, 228 kW)

AUDI A3 Cabriolet (8P7) (04.2008 - 05.2013) 1.8 TFSI (160 PK, 118 kW)
AUDI A3 Cabriolet (8P7) (04.2008 - 05.2013) 2.0 TFSI (200 PK, 147 kW)
AUDI A3 Cabriolet (8V7, 8VE) (10.2013 - 10.2018) 1.8 TFSI (180 PK, 132 kW)
AUDI A3 Cabriolet (8V7, 8VE) (10.2013 - 10.2018) 1.8 TFSI quattro (180 PK, 132 kW)
AUDI A3 Cabriolet (8V7, 8VE) (10.2013 - 10.2018) 2.0 TFSI (211 PK, 155 kW)
AUDI A3 Cabriolet (8V7, 8VE) (10.2013 - 10.2018) S3 quattro (286 PK, 210 kW)
AUDI A3 Cabriolet (8V7, 8VE) (10.2013 - 10.2018) S3 quattro (300 PK, 221 kW)
AUDI A3 Cabriolet (8V7, 8VE) (10.2013 - 10.2018) S3 quattro (310 PK, 228 kW)
AUDI A3 Limousine (8VS, 8VM) (05.2013 - 07.2019) 1.8 TFSI (180 PK, 132 kW)
AUDI A3 Limousine (8VS, 8VM) (05.2013 - 07.2019) 1.8 TFSI quattro (180 PK, 132 kW)
AUDI A3 Limousine (8VS, 8VM) (05.2013 - 07.2019) 2.0 TFSI (220 PK, 162 kW)
AUDI A3 Limousine (8VS, 8VM) (05.2013 - 07.2019) S3 quattro (280 PK, 206 kW)
AUDI A3 Limousine (8VS, 8VM) (05.2013 - 07.2019) S3 quattro (290 PK, 213 kW)
AUDI A3 Limousine (8VS, 8VM) (05.2013 - 07.2019) S3 quattro (300 PK, 221 kW)
AUDI A3 Limousine (8VS, 8VM) (05.2013 - 07.2019) S3 quattro (310 PK, 228 kW)
AUDI A3 Sportback (8PA) (09.2004 - 12.2015) 1.8 TFSI (160 PK, 118 kW)
AUDI A3 Sportback (8PA) (09.2004 - 12.2015) 1.8 TFSI quattro (160 PK, 118 kW)
AUDI A3 Sportback (8PA) (09.2004 - 12.2015) 2.0 TFSI (200 PK, 147 kW)
AUDI A3 Sportback (8PA) (09.2004 - 12.2015) 2.0 TFSI quattro (200 PK, 147 kW)
AUDI A3 Sportback (8VA, 8VF) (09.2012 - 07.2018) 1.8 TFSI (180 PK, 132 kW)
AUDI A3 Sportback (8VA, 8VF) (09.2012 - 07.2018) 1.8 TFSI quattro (180 PK, 132 kW)
AUDI A3 Sportback (8VA, 8VF) (09.2012 - 07.2018) 2.0 45 TFSI (220 PK, 162 kW)
AUDI A3 Sportback (8VA, 8VF) (09.2012 - 07.2018) S3 quattro (280 PK, 206 kW)
AUDI A3 Sportback (8VA, 8VF) (09.2012 - 07.2018) S3 quattro (286 PK, 210 kW)
AUDI A3 Sportback (8VA, 8VF) (09.2012 - 07.2018) S3 quattro (290 PK, 213 kW)
AUDI A3 Sportback (8VA, 8VF) (09.2012 - 07.2018) S3 quattro (300 PK, 221 kW)
AUDI A3 Sportback (8VA, 8VF) (09.2012 - 07.2018) S3 quattro (310 PK, 228 kW)
AUDI A4 Allroad B8 (8KH) (04.2009 - 05.2016) 2.0 TFSI quattro (211 PK, 155 kW)
AUDI A4 B8 (8K2) (08.2007 - 12.2015) 1.8 TFSI (120 PK, 88 kW)
AUDI A4 B8 (8K2) (08.2007 - 12.2015) 1.8 TFSI (160 PK, 118 kW)
AUDI A4 B8 (8K2) (08.2007 - 12.2015) 1.8 TFSI (170 PK, 125 kW)

AUDI A4 B8 (8K2) (08.2007 - 12.2015) 1.8 TFSI quattro (160 PK, 118 kW)
AUDI A4 B8 (8K2) (08.2007 - 12.2015) 1.8 TFSI quattro (170 PK, 125 kW)
AUDI A4 B8 (8K2) (08.2007 - 12.2015) 2.0 TFSI (180 PK, 132 kW)
AUDI A4 B8 (8K2) (08.2007 - 12.2015) 2.0 TFSI (211 PK, 155 kW)
AUDI A4 B8 (8K2) (08.2007 - 12.2015) 2.0 TFSI (220 PK, 162 kW)
AUDI A4 B8 (8K2) (08.2007 - 12.2015) 2.0 TFSI flexible fuel (180 PK, 132 kW)
AUDI A4 B8 (8K2) (08.2007 - 12.2015) 2.0 TFSI flexible fuel quattro (180 PK, 132 kW)
AUDI A4 B8 (8K2) (08.2007 - 12.2015) 2.0 TFSI quattro (180 PK, 132 kW)
AUDI A4 B8 (8K2) (08.2007 - 12.2015) 2.0 TFSI quattro (211 PK, 155 kW)
AUDI A4 B8 (8K2) (08.2007 - 12.2015) 2.0 TFSI quattro (220 PK, 162 kW)
AUDI A4 B8 Avant (8K5) (11.2007 - 12.2015) 1.8 TFSI (120 PK, 88 kW)
AUDI A4 B8 Avant (8K5) (11.2007 - 12.2015) 1.8 TFSI (160 PK, 118 kW)
AUDI A4 B8 Avant (8K5) (11.2007 - 12.2015) 1.8 TFSI (170 PK, 125 kW)
AUDI A4 B8 Avant (8K5) (11.2007 - 12.2015) 1.8 TFSI quattro (160 PK, 118 kW)
AUDI A4 B8 Avant (8K5) (11.2007 - 12.2015) 1.8 TFSI quattro (170 PK, 125 kW)
AUDI A4 B8 Avant (8K5) (11.2007 - 12.2015) 2.0 TFSI (180 PK, 132 kW)
AUDI A4 B8 Avant (8K5) (11.2007 - 12.2015) 2.0 TFSI (211 PK, 155 kW)
AUDI A4 B8 Avant (8K5) (11.2007 - 12.2015) 2.0 TFSI flexible fuel (180 PK, 132 kW)
AUDI A4 B8 Avant (8K5) (11.2007 - 12.2015) 2.0 TFSI flexible fuel quattro (180 PK, 132 kW)
AUDI A4 B8 Avant (8K5) (11.2007 - 12.2015) 2.0 TFSI quattro (211 PK, 155 kW)
AUDI A5 (8T3) (06.2007 - 01.2017) 1.8 TFSI (160 PK, 118 kW)
AUDI A5 (8T3) (06.2007 - 01.2017) 1.8 TFSI (170 PK, 125 kW)
AUDI A5 (8T3) (06.2007 - 01.2017) 1.8 TFSI (177 PK, 130 kW)
AUDI A5 (8T3) (06.2007 - 01.2017) 2.0 TFSI (180 PK, 132 kW)
AUDI A5 (8T3) (06.2007 - 01.2017) 2.0 TFSI (211 PK, 155 kW)
AUDI A5 (8T3) (06.2007 - 01.2017) 2.0 TFSI quattro (211 PK, 155 kW)
AUDI A5 (8T3) (06.2007 - 01.2017) 2.0 TFSI quattro (220 PK, 162 kW)
AUDI A5 Cabriolet (8F7) (02.2009 - 01.2017) 1.8 TFSI (160 PK, 118 kW)
AUDI A5 Cabriolet (8F7) (02.2009 - 01.2017) 1.8 TFSI (170 PK, 125 kW)
AUDI A5 Cabriolet (8F7) (02.2009 - 01.2017) 1.8 TFSI (177 PK, 130 kW)
AUDI A5 Cabriolet (8F7) (02.2009 - 01.2017) 2.0 TFSI (180 PK, 132 kW)
AUDI A5 Cabriolet (8F7) (02.2009 - 01.2017) 2.0 TFSI (211 PK, 155 kW)
AUDI A5 Cabriolet (8F7) (02.2009 - 01.2017) 2.0 TFSI (220 PK, 162 kW)
AUDI A5 Cabriolet (8F7) (02.2009 - 01.2017) 2.0 TFSI quattro (211 PK, 155 kW)
AUDI A5 Sportback (8TA) (09.2009 - 01.2017) 1.8 TFSI (144 PK, 106 kW)
AUDI A5 Sportback (8TA) (09.2009 - 01.2017) 1.8 TFSI (160 PK, 118 kW)
AUDI A5 Sportback (8TA) (09.2009 - 01.2017) 1.8 TFSI (170 PK, 125 kW)
AUDI A5 Sportback (8TA) (09.2009 - 01.2017) 1.8 TFSI (177 PK, 130 kW)
AUDI A5 Sportback (8TA) (09.2009 - 01.2017) 2.0 TFSI (180 PK, 132 kW)

AUDI A5 Sportback (8TA) (09.2009 - 01.2017) 2.0 TFSI (211 PK, 155 kW)
AUDI A5 Sportback (8TA) (09.2009 - 01.2017) 2.0 TFSI quattro (211 PK, 155 kW)
AUDI A6 C7 (4G2, 4GC) (11.2010 - 09.2018) 2.0 TFSI (180 PK, 132 kW)
AUDI A6 C7 (4G2, 4GC) (11.2010 - 09.2018) 2.0 TFSI (211 PK, 155 kW)
AUDI A6 C7 (4G2, 4GC) (11.2010 - 09.2018) 2.0 TFSI (220 PK, 162 kW)
AUDI A6 C7 (4G2, 4GC) (11.2010 - 09.2018) 2.0 TFSI quattro (211 PK, 155 kW)
AUDI A6 C7 (4G2, 4GC) (11.2010 - 09.2018) 2.0 TFSI quattro (220 PK, 162 kW)
AUDI A6 C7 Avant (4G5, 4GD) (05.2011 - 09.2018) 2.0 TFSI (180 PK, 132 kW)
AUDI Q3 (8UB, 8UG) (06.2011 - 12.2018) 2.0 TFSI (180 PK, 132 kW)
AUDI Q3 (8UB, 8UG) (06.2011 - 12.2018) 2.0 TFSI (200 PK, 147 kW)
AUDI Q3 (8UB, 8UG) (06.2011 - 12.2018) 2.0 TFSI quattro (170 PK, 125 kW)
AUDI Q3 (8UB, 8UG) (06.2011 - 12.2018) 2.0 TFSI quattro (180 PK, 132 kW)
AUDI Q3 (8UB, 8UG) (06.2011 - 12.2018) 2.0 TFSI quattro (200 PK, 147 kW)
AUDI Q3 (8UB, 8UG) (06.2011 - 12.2018) 2.0 TFSI quattro (211 PK, 155 kW)
AUDI Q3 (8UB, 8UG) (06.2011 - 12.2018) 2.0 TFSI quattro (220 PK, 162 kW)
AUDI Q5 (8RB) (11.2008 - 12.2017) 2.0 TFSI quattro (177 PK, 130 kW)
AUDI Q5 (8RB) (11.2008 - 12.2017) 2.0 TFSI quattro (180 PK, 132 kW)
AUDI Q5 (8RB) (11.2008 - 12.2017) 2.0 TFSI quattro (211 PK, 155 kW)
AUDI TT (8J3) (07.2006 - 01.2015) 1.8 TFSI (160 PK, 118 kW)
AUDI TT (8J3) (07.2006 - 01.2015) 2.0 TFSI (200 PK, 147 kW)
AUDI TT (8J3) (07.2006 - 01.2015) 2.0 TFSI (211 PK, 155 kW)
AUDI TT (8J3) (07.2006 - 01.2015) 2.0 TFSI quattro (200 PK, 147 kW)
AUDI TT (8J3) (07.2006 - 01.2015) 2.0 TFSI quattro (211 PK, 155 kW)
AUDI TT (FV3, FVP) (07.2014 - 08.2018) 1.8 TFSI (180 PK, 132 kW)
AUDI TT (FV3, FVP) (07.2014 - 08.2018) 2.0 TFSI (230 PK, 169 kW)
AUDI TT (FV3, FVP) (07.2014 - 08.2018) 2.0 TFSI quattro (230 PK, 169 kW)
AUDI TT (FV3, FVP) (07.2014 - 08.2018) 2.0 TTS quattro (286 PK, 210 kW)
AUDI TT Roadster (8J9) (05.2008 - 06.2014) 1.8 TFSI (160 PK, 118 kW)
AUDI TT Roadster (8J9) (05.2008 - 06.2014) 2.0 TFSI (200 PK, 147 kW)
AUDI TT Roadster (8J9) (05.2008 - 06.2014) 2.0 TFSI (211 PK, 155 kW)
AUDI TT Roadster (8J9) (05.2008 - 06.2014) 2.0 TFSI quattro (200 PK, 147 kW)
AUDI TT Roadster (8J9) (05.2008 - 06.2014) 2.0 TFSI quattro (211 PK, 155 kW)
AUDI TT Roadster (FV9, FVR) (11.2014 - 08.2018) 1.8 TFSI (180 PK, 132 kW)
AUDI TT Roadster (FV9, FVR) (11.2014 - 08.2018) 2.0 TFSI (230 PK, 169 kW)
AUDI TT Roadster (FV9, FVR) (11.2014 - 08.2018) 2.0 TFSI quattro (230 PK, 169 kW)

AUDI TT Roadster (FV9, FVR) (11.2014 - 08.2018) 2.0 TTS quattro (286 PK, 210 kW)

Porsche Macan 2.0 (DLHB) 1984 185kW (2015 - 2019)

Porsche Macan 2.0 (CNCC) 1984 174kW (2015 - 2019)

Porsche Macan 2.0 (CYNA) 1984 174kW (2015 - 2019)

Porsche Macan 2.0 (CYNB) 1984 185kW (2016 - 2018)

Porsche Macan 2.0 (CYPA) 1984 185kW (2016 - 2018)

Porsche Macan 2.0 (DKNA) 1984 180kW (2019 - ...)

Porsche Macan 2.0 (DMTA)1984 195kW (2021 - ...)

Porsche Macan 2.0 (DMTD) 1984 195kW (2021 - ...)
SEAT ALHAMBRA (710, 711) (06.2010 - 05.2011) 1.8 TSI (160 PK, 118 kW)
SEAT ALHAMBRA (710, 711) (06.2010 - 05.2011) 2.0 TSI (200 PK, 147 kW)
SEAT ALTEA (5P1) (03.2004 - 08.2011) 1.8 TFSI (160 PK, 118 kW)
SEAT ALTEA XL (5P5, 5P8) (10.2006 - 12.2012) 1.8 TFSI (160 PK, 118 kW)
SEAT ALTEA XL (5P5, 5P8) (10.2006 - 12.2012) 2.0 TFSI 4x4 (211 PK, 155 kW)
SEAT EXEO (3R2) (12.2008 - 05.2013) 1.8 TSI (120 PK, 88 kW)
SEAT EXEO (3R2) (12.2008 - 05.2013) 1.8 TSI (160 PK, 118 kW)
SEAT EXEO (3R2) (12.2008 - 05.2013) 2.0 TFSI (211 PK, 155 kW)
SEAT EXEO ST (3R5) (05.2009 - 05.2013) 1.8 TSI (120 PK, 88 kW)
SEAT EXEO ST (3R5) (05.2009 - 05.2013) 1.8 TSI (160 PK, 118 kW)
SEAT EXEO ST (3R5) (05.2009 - 05.2013) 2.0 TFSI (211 PK, 155 kW)
SEAT LEON (1P1) (05.2005 - 12.2013) 1.8 TSI (160 PK, 118 kW)
SEAT LEON (1P1) (05.2005 - 12.2013) 2.0 TFSI (211 PK, 155 kW)
SEAT LEON (5F1) (09.2012 -) 1.8 TSI (180 PK, 132 kW)
SEAT LEON (5F1) (09.2012 -) 2.0 Cupra (265 PK, 195 kW)
SEAT LEON (5F1) (09.2012 -) 2.0 Cupra (280 PK, 206 kW)
SEAT LEON (5F1) (09.2012 -) 2.0 Cupra (290 PK, 213 kW)
SEAT LEON (5F1) (09.2012 -) 2.0 Cupra (300 PK, 221 kW)
SEAT LEON (5F1) (09.2012 -) 2.0 Cupra R (310 PK, 228 kW)
SEAT LEON Kasten/Schrägheck (5F1) (09.2012 - 10.2016) 1.8 TFSI (180 PK, 132 kW)
SEAT LEON Kasten/Schrägheck (5F1) (09.2012 - 10.2016) 2.0 Cupra (290 PK, 213 kW)
SEAT LEON Kasten/Schrägheck (5F1) (09.2012 - 10.2016) 2.0 Cupra (300 PK, 221 kW)
SEAT LEON SC (5F5) (01.2013 - 12.2018) 1.8 TSI (180 PK, 132 kW)
SEAT LEON SC (5F5) (01.2013 - 12.2018) 2.0 Cupra (265 PK, 195 kW)
SEAT LEON SC (5F5) (01.2013 - 12.2018) 2.0 Cupra (280 PK, 206 kW)
SEAT LEON SC (5F5) (01.2013 - 12.2018) 2.0 Cupra (290 PK, 213 kW)

SEAT LEON SC (5F5) (01.2013 - 12.2018) 2.0 Cupra (300 PK, 221 kW)
SEAT LEON ST (5F8) (09.2012 -) 1.8 TSI (180 PK, 132 kW)
SEAT LEON ST (5F8) (09.2012 -) 1.8 TSI 4Drive (180 PK, 132 kW)
SEAT LEON ST (5F8) (09.2012 -) 2.0 Cupra (265 PK, 195 kW)
SEAT LEON ST (5F8) (09.2012 -) 2.0 Cupra (280 PK, 206 kW)
SEAT LEON ST (5F8) (09.2012 -) 2.0 Cupra (290 PK, 213 kW)
SEAT LEON ST (5F8) (09.2012 -) 2.0 Cupra (300 PK, 221 kW)
SEAT LEON ST (5F8) (09.2012 -) 2.0 Cupra 4Drive (300 PK, 221 kW)
SEAT LEON ST Kasten/Kombi (5F8) (01.2013 -) 1.8 TFSI (180 PK, 132 kW)
SEAT LEON ST Kasten/Kombi (5F8) (01.2013 -) 2.0 Cupra (280 PK, 206 kW)
SEAT LEON ST Kasten/Kombi (5F8) (01.2013 -) 2.0 Cupra (300 PK, 221 kW)
SEAT LEON ST Kasten/Kombi (5F8) (01.2013 -) 2.0 Cupra 4Drive (300 PK, 221 kW)
SEAT TOLEDO III (5P2) (04.2004 - 05.2009) 1.8 TFSI (160 PK, 118 kW)
SKODA OCTAVIA III (1Z3) (02.2004 - 06.2013) 1.8 TSI (152 PK, 112 kW)
SKODA OCTAVIA III (1Z3) (02.2004 - 06.2013) 1.8 TSI (160 PK, 118 kW)
SKODA OCTAVIA III (1Z3) (02.2004 - 06.2013) 2.0 RS (200 PK, 147 kW)
SKODA OCTAVIA III Combi (1Z5) (02.2004 - 06.2013) 1.8 TSI (152 PK, 112 kW)
SKODA OCTAVIA III Combi (1Z5) (02.2004 - 06.2013) 1.8 TSI (160 PK, 118 kW)
SKODA OCTAVIA III Combi (1Z5) (02.2004 - 06.2013) 1.8 TSI 4x4 (152 PK, 112 kW)
SKODA OCTAVIA III Combi (1Z5) (02.2004 - 06.2013) 1.8 TSI 4x4 (160 PK, 118 kW)
SKODA OCTAVIA III Combi (1Z5) (02.2004 - 06.2013) 2.0 RS (200 PK, 147 kW)
SKODA OCTAVIA IV (5E3, NL3, NR3) (11.2012 - 02.2017) 1.8 TSI (180 PK, 132 kW)
SKODA OCTAVIA IV (5E3, NL3, NR3) (11.2012 - 02.2017) 1.8 TSI 4x4 (180 PK, 132 kW)
SKODA OCTAVIA IV (5E3, NL3, NR3) (11.2012 - 02.2017) 2.0 TSI RS (220 PK, 162 kW)
SKODA OCTAVIA IV (5E3, NL3, NR3) (11.2012 - 02.2017) 2.0 TSI RS (230 PK, 169 kW)
SKODA OCTAVIA IV Combi (5E5, 5E6) (11.2012 - 02.2017) 1.8 TSI (180 PK, 132 kW)
SKODA OCTAVIA IV Combi (5E5, 5E6) (11.2012 - 02.2017) 1.8 TSI 4x4 (180 PK, 132 kW)
SKODA OCTAVIA IV Combi (5E5, 5E6) (11.2012 - 02.2017) 2.0 TSI RS (220 PK, 162 kW)
SKODA OCTAVIA IV Combi (5E5, 5E6) (11.2012 - 02.2017) 2.0 TSI RS (230 PK, 169 kW)
SKODA SUPERB II (3T4) (03.2008 - 05.2015) 1.8 TSI (152 PK, 112 kW)
SKODA SUPERB II (3T4) (03.2008 - 05.2015) 1.8 TSI (160 PK, 118 kW)

SKODA SUPERB II (3T4) (03.2008 - 05.2015) 1.8 TSI 4x4 (152 PK, 112 kW)
SKODA SUPERB II (3T4) (03.2008 - 05.2015) 1.8 TSI 4x4 (160 PK, 118 kW)
SKODA SUPERB II (3T4) (03.2008 - 05.2015) 2.0 TSI (200 PK, 147 kW)
SKODA SUPERB II Kombi (3T5) (10.2009 - 05.2015) 1.8 TSI (152 PK, 112 kW)
SKODA SUPERB II Kombi (3T5) (10.2009 - 05.2015) 1.8 TSI (160 PK, 118 kW)
SKODA SUPERB II Kombi (3T5) (10.2009 - 05.2015) 1.8 TSI 4x4 (152 PK, 112 kW)
SKODA SUPERB II Kombi (3T5) (10.2009 - 05.2015) 1.8 TSI 4x4 (160 PK, 118 kW)
SKODA SUPERB II Kombi (3T5) (10.2009 - 05.2015) 2.0 TSI (200 PK, 147 kW)
SKODA SUPERB III (3V3) (03.2015 -) 1.8 TSI (180 PK, 132 kW)
SKODA SUPERB III (3V3) (03.2015 -) 2.0 TSI (220 PK, 162 kW)
SKODA SUPERB III (3V3) (03.2015 -) 2.0 TSI 4x4 (280 PK, 206 kW)
SKODA SUPERB III Kombi (3V5) (03.2015 -) 1.8 TSI (180 PK, 132 kW)
SKODA SUPERB III Kombi (3V5) (03.2015 -) 2.0 TSI (220 PK, 162 kW)
SKODA SUPERB III Kombi (3V5) (03.2015 -) 2.0 TSI 4x4 (280 PK, 206 kW)
SKODA YETI (5L) (05.2009 - 12.2017) 1.8 TSI 4x4 (152 PK, 112 kW)
SKODA YETI (5L) (05.2009 - 12.2017) 1.8 TSI 4x4 (160 PK, 118 kW)
VW BEETLE (5C1, 5C2) (04.2011 - 07.2019) 2.0 TSI (200 PK, 147 kW)
VW BEETLE (5C1, 5C2) (04.2011 - 07.2019) 2.0 TSI (220 PK, 162 kW)
VW BEETLE Cabriolet (5C7, 5C8) (12.2011 - 07.2019) 2.0 TSI (200 PK, 147 kW)
VW BEETLE Cabriolet (5C7, 5C8) (12.2011 - 07.2019) 2.0 TSI (220 PK, 162 kW)
VW CC (358) (11.2011 - 12.2016) 1.8 TSI (152 PK, 112 kW)
VW CC (358) (11.2011 - 12.2016) 1.8 TSI (160 PK, 118 kW)
VW CC (358) (11.2011 - 12.2016) 2.0 TSI (200 PK, 147 kW)
VW CC (358) (11.2011 - 12.2016) 2.0 TSI (210 PK, 155 kW)
VW EOS (1F7, 1F8) (03.2006 - 08.2015) 2.0 TFSI (200 PK, 147 kW)
VW EOS (1F7, 1F8) (03.2006 - 08.2015) 2.0 TFSI (220 PK, 162 kW)
VW EOS (1F7, 1F8) (03.2006 - 08.2015) 2.0 TSI (210 PK, 155 kW)
VW GOLF V (1K1) (10.2003 - 02.2009) 2.0 GTI (200 PK, 147 kW)
VW GOLF V Variant (1K5) (01.2007 - 07.2009) 2.0 (200 PK, 147 kW)
VW GOLF VI (5K1) (10.2008 - 12.2014) 1.8 TSI (160 PK, 118 kW)
VW GOLF VI (5K1) (10.2008 - 12.2014) 2.0 GTi (200 PK, 147 kW)
VW GOLF VI (5K1) (10.2008 - 12.2014) 2.0 GTi (210 PK, 155 kW)
VW GOLF VI Cabriolet (517) (03.2011 - 05.2016) 2.0 GTI (211 PK, 155 kW)
VW GOLF VI Cabriolet (517) (03.2011 - 05.2016) 2.0 TSI (220 PK, 162 kW)
VW GOLF VI Van (5K1_) (10.2008 - 11.2012) 2.0 GTi (211 PK, 155 kW)
VW GOLF VI Variant (AJ5) (07.2009 - 07.2014) 2.0 TSI (200 PK, 147 kW)
VW GOLF VII (5G1, BQ1, BE1, BE2) (08.2012 - 05.2019) 2.0 GTI (220 PK, 162 kW)
VW GOLF VII (5G1, BQ1, BE1, BE2) (08.2012 - 05.2019) 2.0 GTI (230 PK, 169 kW)

VW GOLF VII (5G1, BQ1, BE1, BE2) (08.2012 - 05.2019) 2.0 GTI Clubsport S (310 PK, 228 kW)
VW GOLF VII (5G1, BQ1, BE1, BE2) (08.2012 - 05.2019) 2.0 R 4motion (280 PK, 206 kW)
VW GOLF VII (5G1, BQ1, BE1, BE2) (08.2012 - 05.2019) 2.0 R 4motion (290 PK, 213 kW)
VW GOLF VII (5G1, BQ1, BE1, BE2) (08.2012 - 05.2019) 2.0 R 4motion (300 PK, 221 kW)
VW GOLF VII (5G1, BQ1, BE1, BE2) (08.2012 - 05.2019) 2.0 R 4motion (310 PK, 228 kW)
VW GOLF VII Van (5G1) (08.2012 -) 2.0 GTi (220 PK, 162 kW)
VW GOLF VII Van (5G1) (08.2012 -) 2.0 GTi (230 PK, 169 kW)
VW GOLF VII Variant (BA5, BV5) (04.2013 - 05.2018) 1.8 TSI 4motion (179 PK, 132 kW)
VW GOLF VII Variant (BA5, BV5) (04.2013 - 05.2018) 2.0 R 4motion (280 PK, 206 kW)
VW GOLF VII Variant (BA5, BV5) (04.2013 - 05.2018) 2.0 R 4motion (290 PK, 213 kW)
VW GOLF VII Variant (BA5, BV5) (04.2013 - 05.2018) 2.0 R 4motion (300 PK, 221 kW)
VW GOLF VII Variant (BA5, BV5) (04.2013 - 05.2018) 2.0 R 4motion (310 PK, 228 kW)
VW JETTA III (1K2) (09.2004 - 12.2013) 2.0 TFSI (170 PK, 125 kW)
VW JETTA III (1K2) (09.2004 - 12.2013) 2.0 TFSI (200 PK, 147 kW)
VW JETTA IV (162, 163, AV3, AV2) (01.2008 - 04.2018) 2.0 TSI (200 PK, 147 kW)
VW JETTA IV (162, 163, AV3, AV2) (01.2008 - 04.2018) 2.0 Total Flex (200 PK, 147 kW)
VW PASSAT ALLTRACK B7 (365) (01.2012 - 12.2014) 1.8 TSI (152 PK, 112 kW)
VW PASSAT ALLTRACK B7 (365) (01.2012 - 12.2014) 1.8 TSI (160 PK, 118 kW)
VW PASSAT ALLTRACK B7 (365) (01.2012 - 12.2014) 2.0 TSI 4motion (210 PK, 155 kW)
VW PASSAT ALLTRACK B8 Variant (3G5, CB5) (05.2015 - 11.2017) 2.0 TSI 4motion (220 PK, 162 kW)
VW PASSAT B6 (3C2) (03.2005 - 11.2010) 1.8 TSI (152 PK, 112 kW)
VW PASSAT B6 (3C2) (03.2005 - 11.2010) 1.8 TSI (160 PK, 118 kW)
VW PASSAT B6 (3C2) (03.2005 - 11.2010) 2.0 FSI (200 PK, 147 kW)
VW PASSAT B6 Variant (3C5) (08.2005 - 10.2011) 1.8 TSI (152 PK, 112 kW)
VW PASSAT B6 Variant (3C5) (08.2005 - 10.2011) 1.8 TSI (160 PK, 118 kW)
VW PASSAT B6 Variant (3C5) (08.2005 - 10.2011) 2.0 FSI (200 PK, 147 kW)

VW PASSAT B7 (362) (08.2010 - 12.2015) 1.8 TSI (152 PK, 112 kW)
VW PASSAT B7 (362) (08.2010 - 12.2015) 1.8 TSI (160 PK, 118 kW)
VW PASSAT B7 (362) (08.2010 - 12.2015) 2.0 TSI (210 PK, 155 kW)
VW PASSAT B7 Kasten/Kombi (365) (08.2010 - 12.2014) 1.8 TFSi (160 PK, 118 kW)
VW PASSAT B7 Variant (365) (08.2010 - 12.2015) 1.8 TSI (152 PK, 112 kW)
VW PASSAT B7 Variant (365) (08.2010 - 12.2015) 1.8 TSI (160 PK, 118 kW)
VW PASSAT B7 Variant (365) (08.2010 - 12.2015) 2.0 TSI (210 PK, 155 kW)
VW PASSAT B8 (3G2, CB2) (08.2014 - 11.2017) 1.8 TSI (180 PK, 132 kW)
VW PASSAT B8 (3G2, CB2) (08.2014 - 11.2017) 2.0 TSI 4motion (280 PK, 206 kW)
VW PASSAT B8 Variant (3G5, CB5) (08.2014 - 11.2017) 1.8 TSI (180 PK, 132 kW)
VW PASSAT B8 Variant (3G5, CB5) (08.2014 - 11.2017) 2.0 TSI (220 PK, 162 kW)
VW PASSAT B8 Variant (3G5, CB5) (08.2014 - 11.2017) 2.0 TSI 4motion (280 PK, 206 kW)
VW PASSAT CC B6 (357) (02.2008 - 01.2012) 1.8 TSI (152 PK, 112 kW)
VW PASSAT CC B6 (357) (02.2008 - 01.2012) 1.8 TSI (160 PK, 118 kW)
VW PASSAT CC B6 (357) (02.2008 - 01.2012) 2.0 TSI (200 PK, 147 kW)
VW PASSAT CC B6 (357) (02.2008 - 01.2012) 2.0 TSI (211 PK, 155 kW)
VW SCIROCCO III (137, 138) (05.2008 - 11.2017) 2.0 TSI (180 PK, 132 kW)
VW SCIROCCO III (137, 138) (05.2008 - 11.2017) 2.0 TSI (210 PK, 155 kW)
VW SCIROCCO III (137, 138) (05.2008 - 11.2017) 2.0 TSI (220 PK, 162 kW)
VW SCIROCCO Van (137) (06.2008 - 05.2014) 2.0 TFSi (211 PK, 155 kW)
VW SHARAN (7N1, 7N2) (05.2010 - 07.2019) 1.8 TSI (160 PK, 118 kW)
VW SHARAN (7N1, 7N2) (05.2010 - 07.2019) 2.0 TSI (200 PK, 147 kW)
VW TIGUAN (5N_) (09.2007 - 07.2018) 2.0 TFSI (200 PK, 147 kW)
VW TIGUAN (5N_) (09.2007 - 07.2018) 2.0 TFSI 4motion (170 PK, 125 kW)
VW TIGUAN (5N_) (09.2007 - 07.2018) 2.0 TFSI 4motion (200 PK, 147 kW)
VW TIGUAN (5N_) (09.2007 - 07.2018) 2.0 TSI 4motion (180 PK, 132 kW)
VW TIGUAN (5N_) (09.2007 - 07.2018) 2.0 TSI 4motion (211 PK, 155 kW)
VW TIGUAN (AD1, AX1) (01.2016 - 07.2020) 2.0 TSI 4motion (220 PK, 162 kW)
VW TOURAN (5T1) (05.2015 - 07.2019) 1.8 TSI (180 PK, 132 kW)

Product galerij